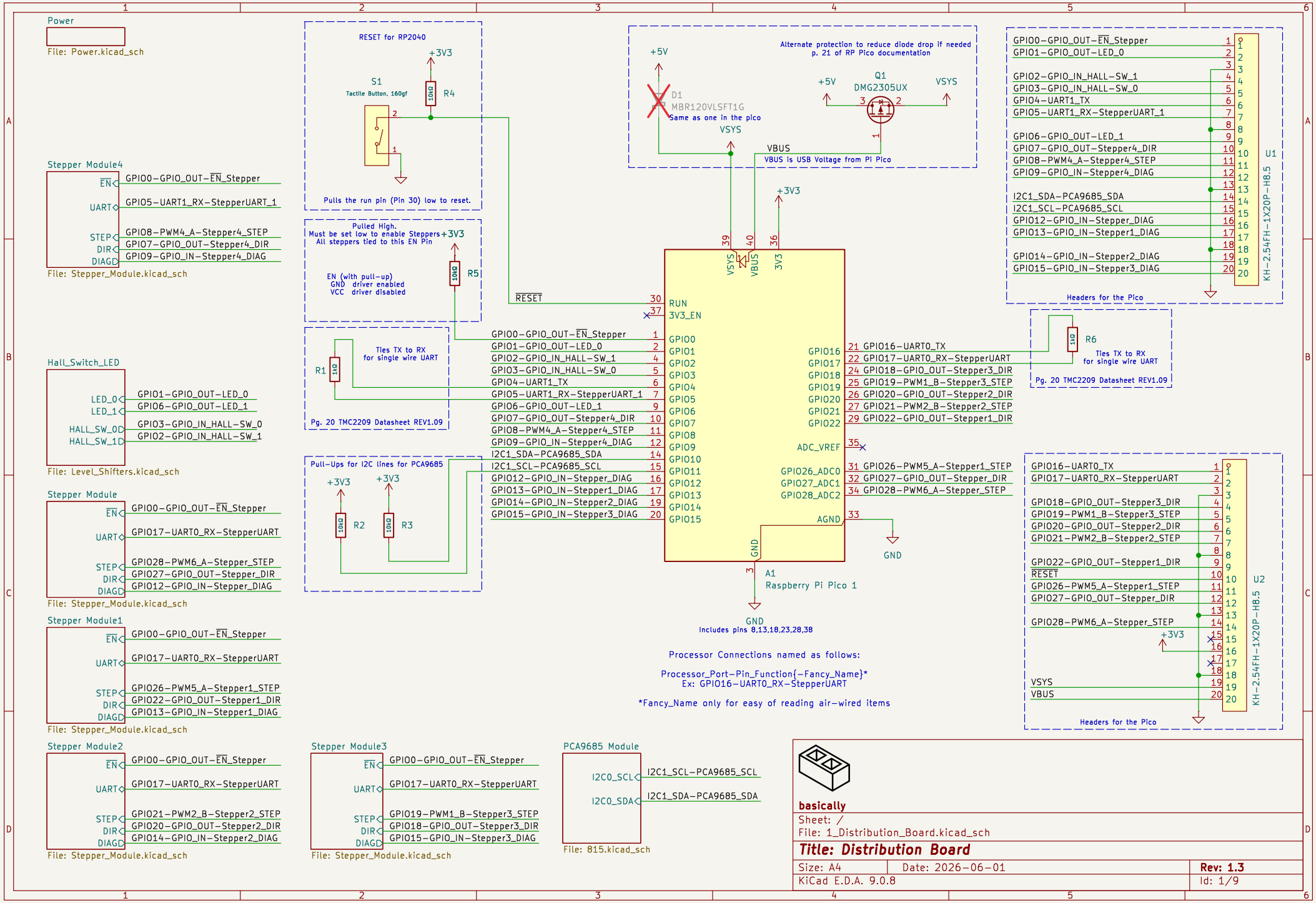
Power
File: Power.kicad_sch
RESET for RP2040
+3V3
S1
Tactile Button, 160gf
R4
10kΩ
Pulls the run pin (Pin 30) low to reset.
Alternate protection to reduce diode drop if needed
p. 21 of RP Pico documentation
+5V
D1
MBR120VLSFT1G
Same as one in the pico
VSYS
Q1
DMG2305UX
VBUS
VBUS is USB Voltage from Pi Pico
Stepper Module4
EN
UART
STEP
DIR
DIAG
GPIO0–GPIO_OUT–EN_Stepper
GPIO5–UART1_RX–StepperUART_1
GPIO8–PWM4_A–Stepper4_STEP
GPIO7–GPIO_OUT–Stepper4_DIR
GPIO9–GPIO_IN–Stepper4_DIAG
File: Stepper_Module.kicad_sch
Pulled High.
Must be set low to enable Steppers
All steppers tied to this EN Pin
EN (with pull–up)
GND driver enabled
VCC driver disabled
R5
10kΩ
RESET
Hall_Switch_LED
LED_0
LED_1
HALL_SW_0
HALL_SW_1
GPIO1–GPIO_OUT–LED_0
GPIO6–GPIO_OUT–LED_1
GPIO3–GPIO_IN–HALL–SW_0
GPIO2–GPIO_IN–HALL–SW_1
File: Level_Shifters.kicad_sch
Ties TX to RX
for single wire UART
R1
1kΩ
Pg. 20 TMC2209 Datasheet REV1.09
Pull–Ups for I2C lines for PCA9685
R2
R3
10kΩ
Stepper Module
GPIO17–UART0_RX–StepperUART
GPIO28–PWM6_A–Stepper_STEP
GPIO27–GPIO_OUT–Stepper_DIR
GPIO12–GPIO_IN–Stepper_DIAG
File: Stepper_Module.kicad_sch
Stepper Module1
GPIO26–PWM5_A–Stepper1_STEP
GPIO22–GPIO_OUT–Stepper1_DIR
GPIO13–GPIO_IN–Stepper1_DIAG
File: Stepper_Module.kicad_sch
Stepper Module2
GPIO21–PWM2_B–Stepper2_STEP
GPIO20–GPIO_OUT–Stepper2_DIR
GPIO14–GPIO_IN–Stepper2_DIAG
File: Stepper_Module.kicad_sch
Stepper Module3
GPIO19–PWM1_B–Stepper3_STEP
GPIO18–GPIO_OUT–Stepper3_DIR
GPIO15–GPIO_IN–Stepper3_DIAG
File: Stepper_Module.kicad_sch
PCA9685 Module
I2C0_SCL
I2C0_SDA
I2C1_SCL–PCA9685_SCL
I2C1_SDA–PCA9685_SDA
File: 815.kicad_sch
RUN
3V3_EN
GPIO0
GPIO1
GPIO2
GPIO3
GPIO4
GPIO5
GPIO6
GPIO7
GPIO8
GPIO9
GPIO10
GPIO11
GPIO12
GPIO13
GPIO14
GPIO15
GPIO16
GPIO17
GPIO18
GPIO19
GPIO20
GPIO21
GPIO22
ADC_VREF
GPIO26_ADC0
GPIO27_ADC1
GPIO28_ADC2
AGND
VSYS
VBUS
3V3
A1
Raspberry Pi Pico 1
GND
Includes pins 8,13,18,23,28,38
Processor Connections named as follows:
Processor_Port–Pin_Function{–Fancy_Name}*
Ex: GPIO16–UART0_RX–StepperUART
*Fancy_Name only for easy of reading air–wired items
GPIO0–GPIO_OUT–EN_Stepper
GPIO1–GPIO_OUT–LED_0
GPIO2–GPIO_IN–HALL–SW_1
GPIO3–GPIO_IN–HALL–SW_0
GPIO4–UART1_TX
GPIO5–UART1_RX–StepperUART_1
GPIO6–GPIO_OUT–LED_1
GPIO7–GPIO_OUT–Stepper4_DIR
GPIO8–PWM4_A–Stepper4_STEP
GPIO9–GPIO_IN–Stepper4_DIAG
I2C1_SDA–PCA9685_SDA
I2C1_SCL–PCA9685_SCL
GPIO12–GPIO_IN–Stepper_DIAG
GPIO13–GPIO_IN–Stepper1_DIAG
GPIO14–GPIO_IN–Stepper2_DIAG
GPIO15–GPIO_IN–Stepper3_DIAG
GPIO16–UART0_TX
GPIO17–UART0_RX–StepperUART
GPIO18–GPIO_OUT–Stepper3_DIR
GPIO19–PWM1_B–Stepper3_STEP
GPIO20–GPIO_OUT–Stepper2_DIR
GPIO21–PWM2_B–Stepper2_STEP
GPIO22–GPIO_OUT–Stepper1_DIR
GPIO26–PWM5_A–Stepper1_STEP
GPIO27–GPIO_OUT–Stepper_DIR
GPIO28–PWM6_A–Stepper_STEP
U1
U2
KH–2.54FH–1X20P–H8.5
Headers for the Pico
R6
1kΩ
Ties TX to RX
for single wire UART
Pg. 20 TMC2209 Datasheet REV1.09
RESET
VSYS
VBUS
basically
Sheet: /
File: 1_Distribution_Board.kicad_sch
Title: Distribution Board
Size: A4
Date: 2026–06–01
Rev: 1.3
KiCad E.D.A. 9.0.8
Id: 1/9

Power Input

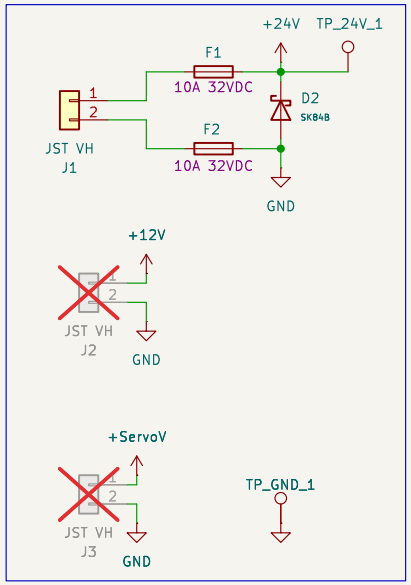

Power Indicators

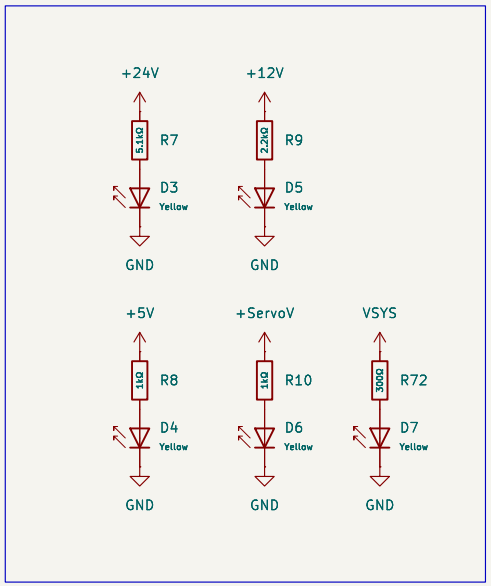

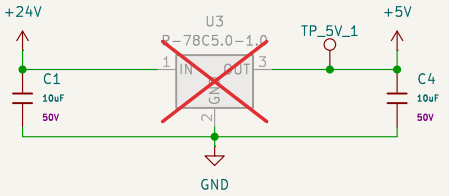

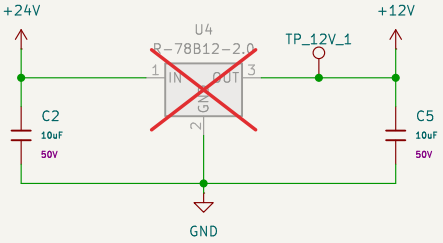

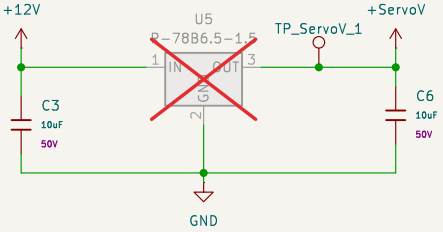

Inrush protection needed for the stack rail?

Power Output

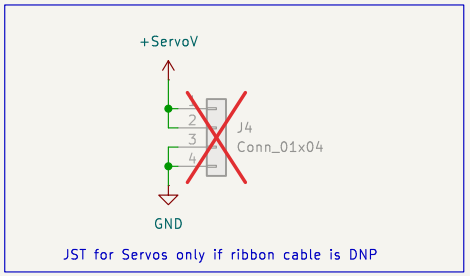

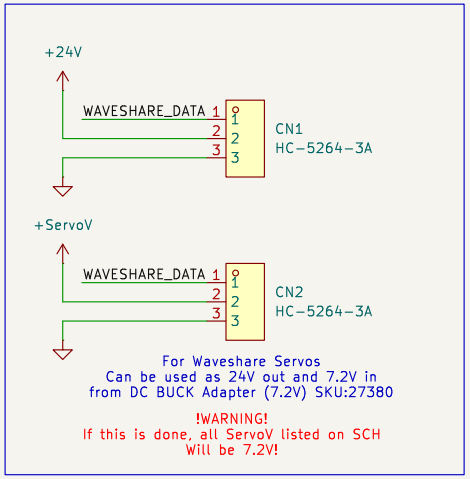

basically

Sheet: /Power/
File: Power.kicad_sch

Title: Distribution Board

Size: A4	Date: 2026-06-01	**Rev: 1.3**
KiCad E.D.A. 9.0.8		Id: 2/9

For the Switch, wire the switch as Normally Closed between pins 1 and 2.
For the HALL Sensor, insure signal is on pin 2.

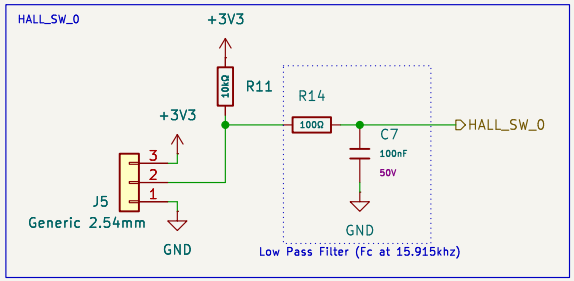

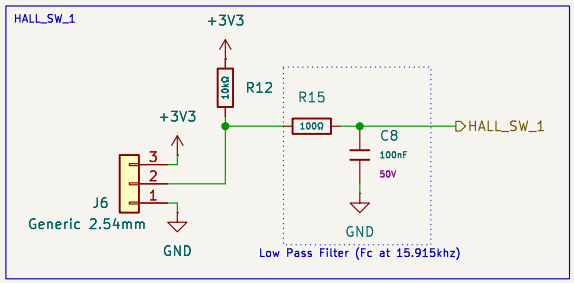

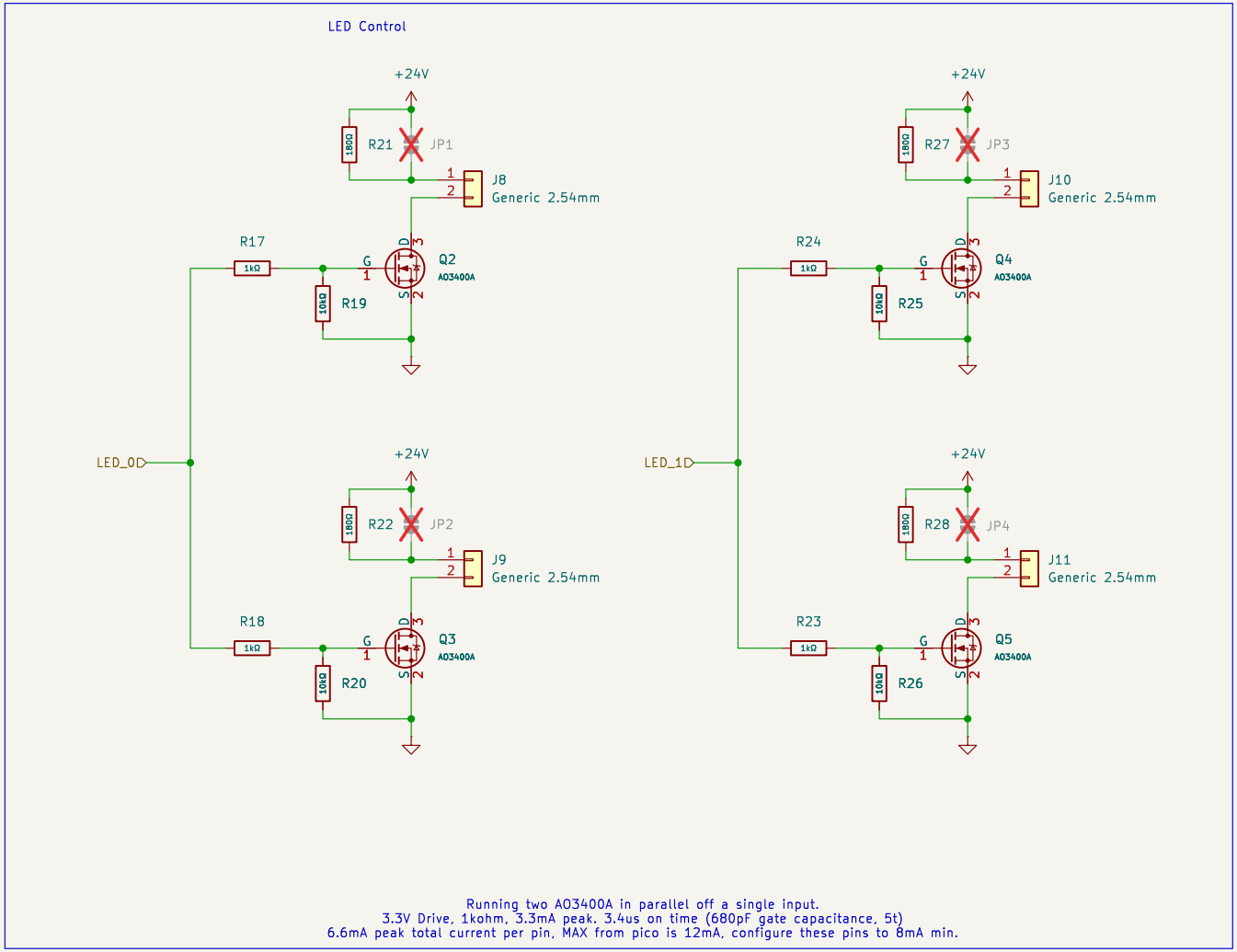

NEO Pixel 1

TBD

basically

Sheet: /Hall_Switch_LED/
File: Level_Shifters.kicad_sch

Title: Distribution Board

Size: A4	Date: 2026-06-01	**Rev: 1.3**
KiCad E.D.A. 9.0.8		Id: 3/9

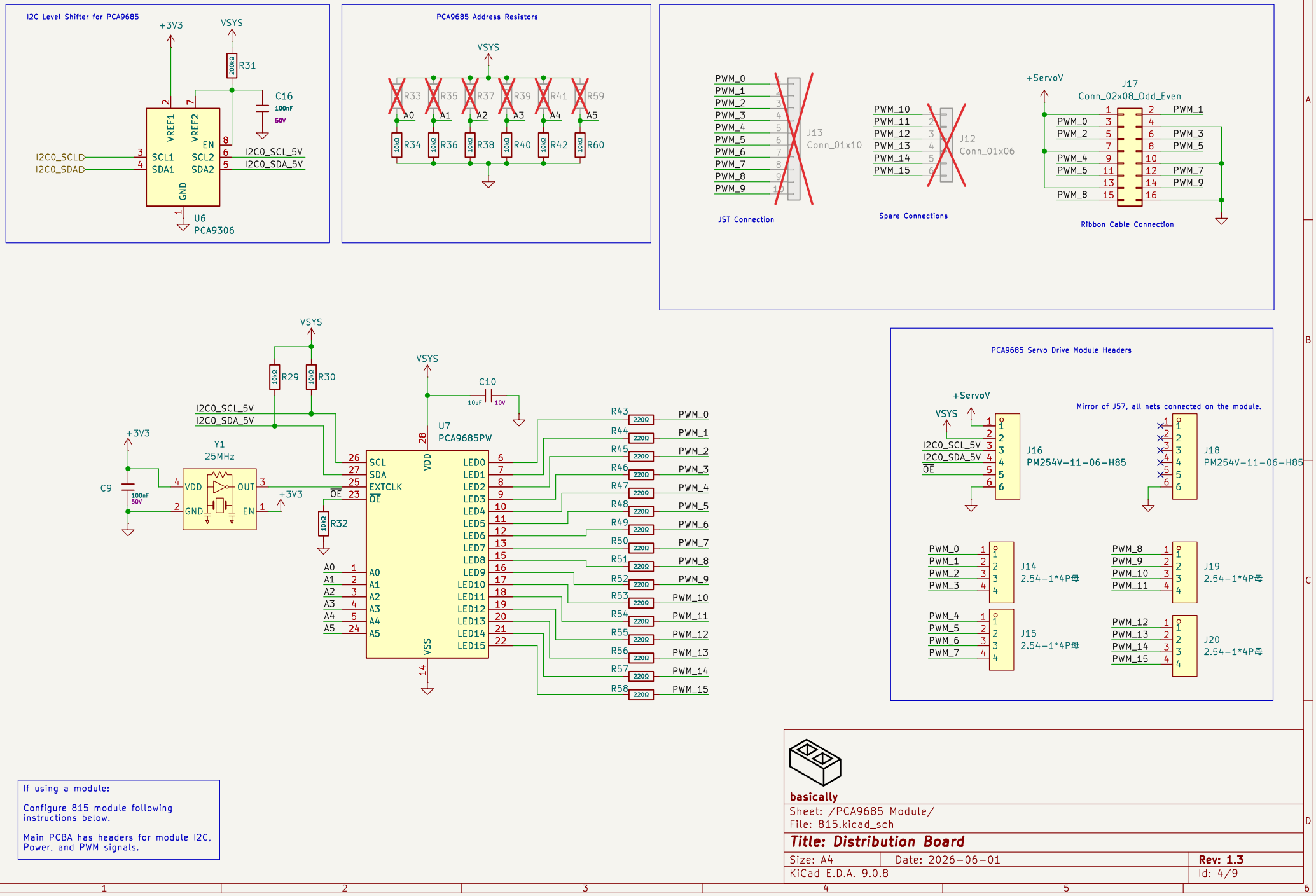
I2C Level Shifter for PCA9685
+3V3
VSYS
R31
200kΩ
C16
100nF
50V
VREF1
VREF2
EN
SCL1
SDA1
SCL2
SDA2
GND
I2C0_SCL
I2C0_SDA
I2C0_SCL_5V
I2C0_SDA_5V
U6
PCA9306
PCA9685 Address Resistors
VSYS
R33
R35
R37
R39
R41
R59
A0
A1
A2
A3
A4
A5
10kΩ
R34
R36
R38
R40
R42
R60
PWM_0
PWM_1
PWM_2
PWM_3
PWM_4
PWM_5
PWM_6
PWM_7
PWM_8
PWM_9
J13
Conn_01x10
JST Connection
PWM_10
PWM_11
PWM_12
PWM_13
PWM_14
PWM_15
J12
Conn_01x06
Spare Connections
+ServoV
J17
Conn_02x08_Odd_Even
Ribbon Cable Connection
VSYS
R29
R30
10kΩ
C10
10uF
10V
I2C0_SCL_5V
I2C0_SDA_5V
+3V3
Y1
25MHz
C9
100nF
50V
VDD
OUT
GND
EN
OE
R32
U7
PCA9685PW
SCL
SDA
EXTCLK
OE
VDD
VSS
LED0
LED1
LED2
LED3
LED4
LED5
LED6
LED7
LED8
LED9
LED10
LED11
LED12
LED13
LED14
LED15
R43
R44
R45
R46
R47
R48
R49
R50
R51
R52
R53
R54
R55
R56
R57
R58
220Ω
PWM_0
PWM_1
PWM_2
PWM_3
PWM_4
PWM_5
PWM_6
PWM_7
PWM_8
PWM_9
PWM_10
PWM_11
PWM_12
PWM_13
PWM_14
PWM_15
PCA9685 Servo Drive Module Headers
+ServoV
VSYS
I2C0_SCL_5V
I2C0_SDA_5V
OE
J16
PM254V-11-06-H85
Mirror of J57, all nets connected on the module.
J18
PM254V-11-06-H85
J14
2.54-1*4P母
J15
2.54-1*4P母
J19
2.54-1*4P母
J20
2.54-1*4P母
If using a module:
Configure 815 module following instructions below.
Main PCBA has headers for module I2C, Power, and PWM signals.
basically
Sheet: /PCA9685 Module/
File: 815.kicad_sch
Title: Distribution Board
Size: A4
Date: 2026-06-01
Rev: 1.3
KiCad E.D.A. 9.0.8
Id: 4/9

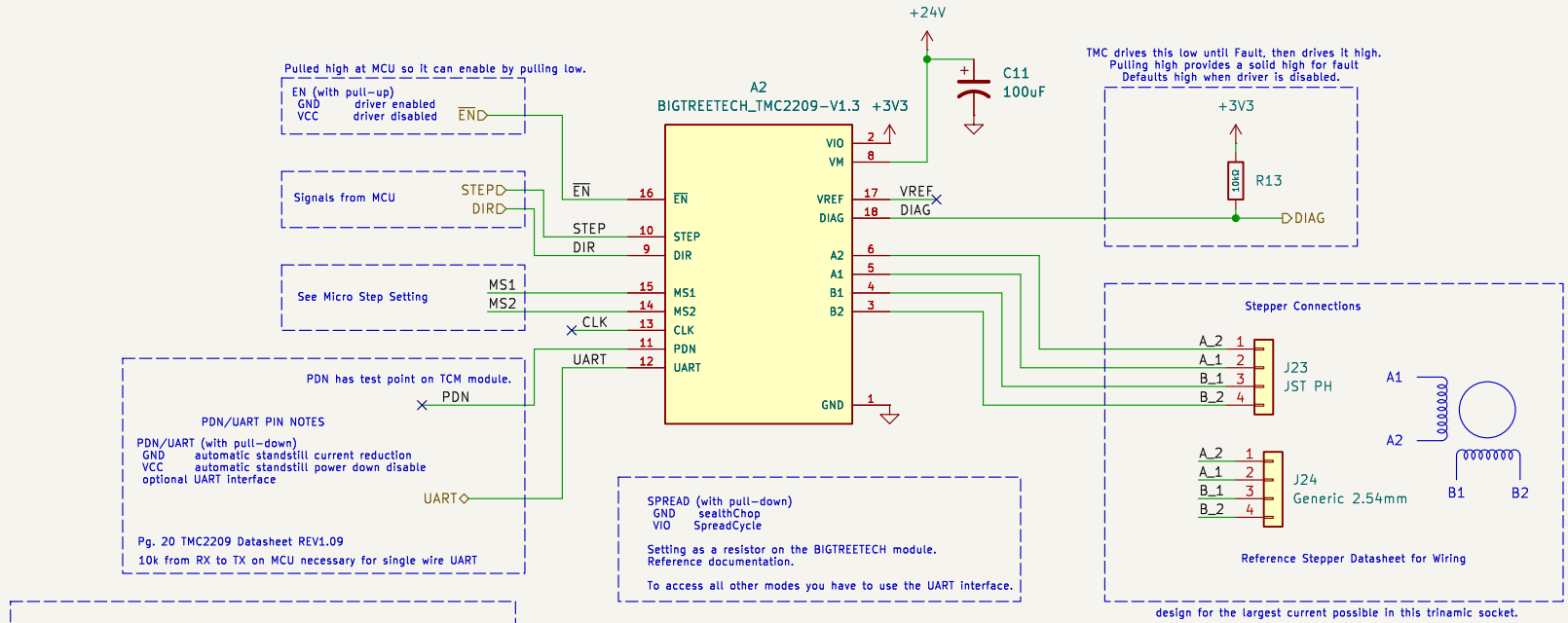

basically

Sheet: /Stepper Module/
File: Stepper_Module.kicad_sch

Title: Distribution Board

Size: A4	Date: 2026-06-01	**Rev: 1.3**
KiCad E.D.A. 9.0.8		Id: 5/9

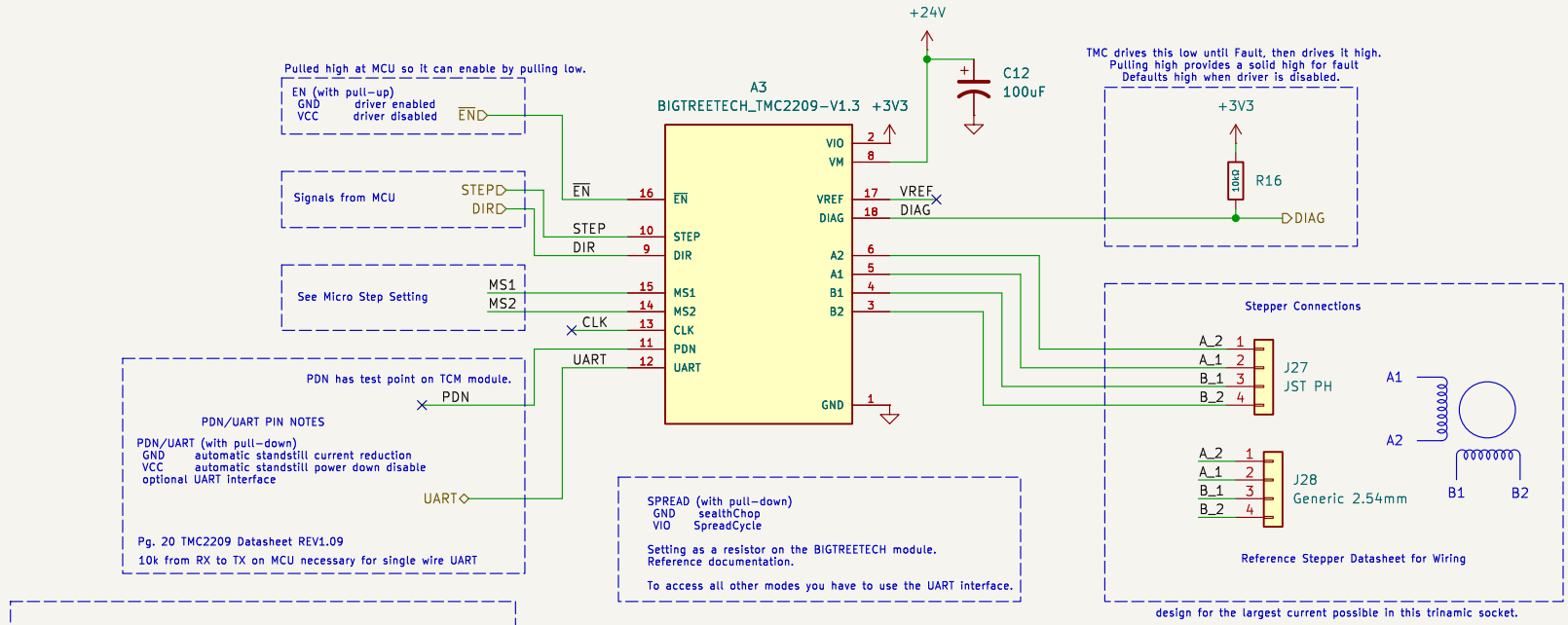

basically

Sheet: /Stepper Module1/
File: Stepper_Module.kicad_sch

Title: Distribution Board

Size: A4	Date: 2026-06-01	**Rev: 1.3**
KiCad E.D.A. 9.0.8		Id: 6/9

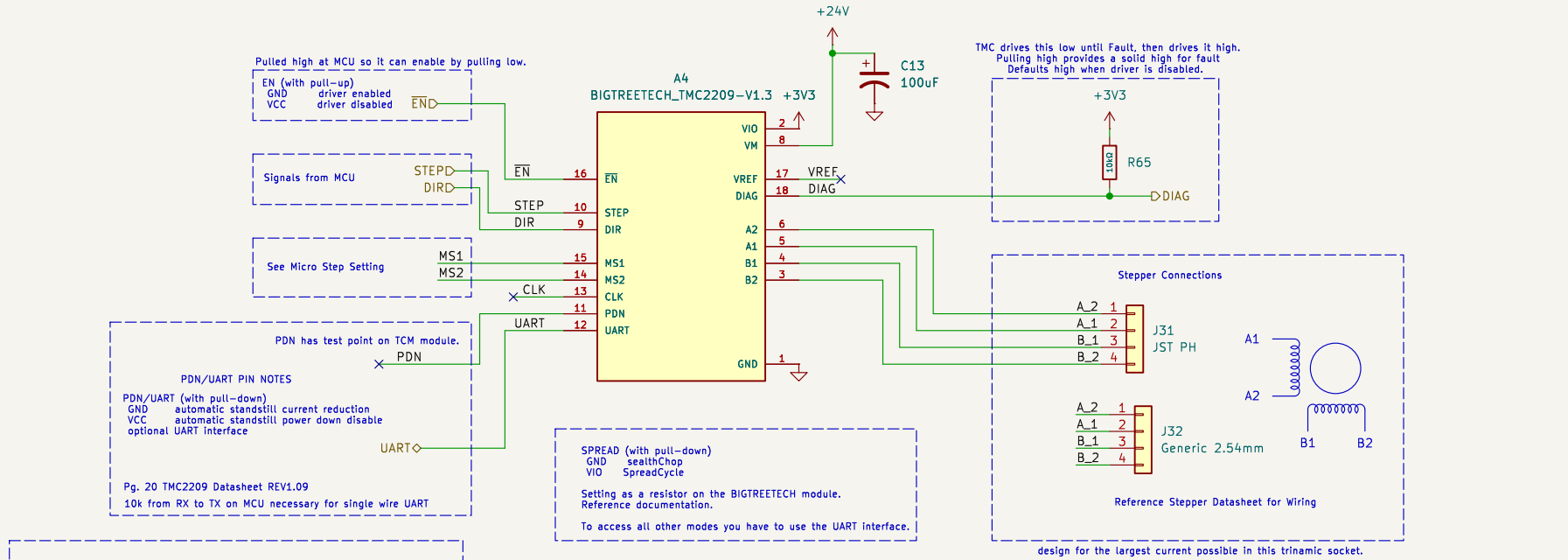

basically

Sheet: /Stepper Module2/
File: Stepper_Module.kicad_sch

Title: Distribution Board

Size: A4	Date: 2026-06-01	**Rev: 1.3**
KiCad E.D.A. 9.0.8		Id: 7/9

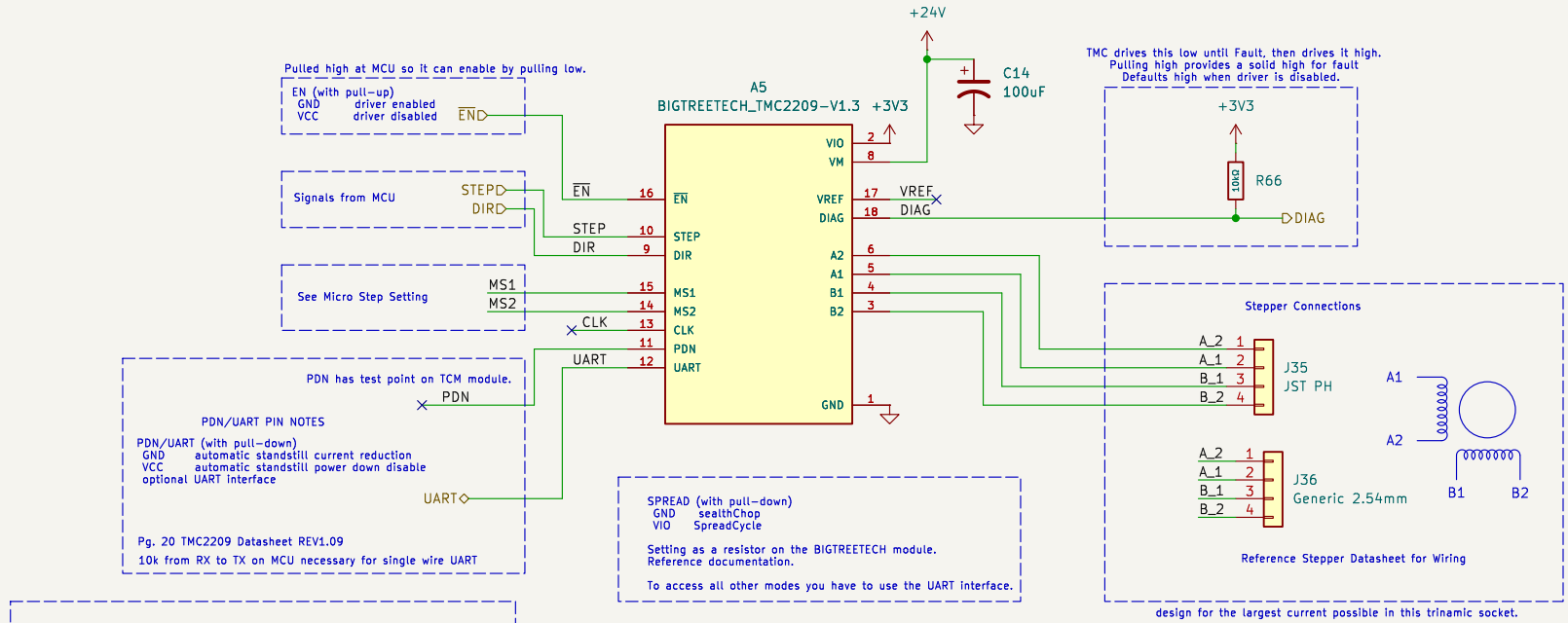

basically

Sheet: /Stepper Module3/
File: Stepper_Module.kicad_sch

Title: Distribution Board

Size: A4	Date: 2026-06-01	**Rev: 1.3**
KiCad E.D.A. 9.0.8		Id: 8/9

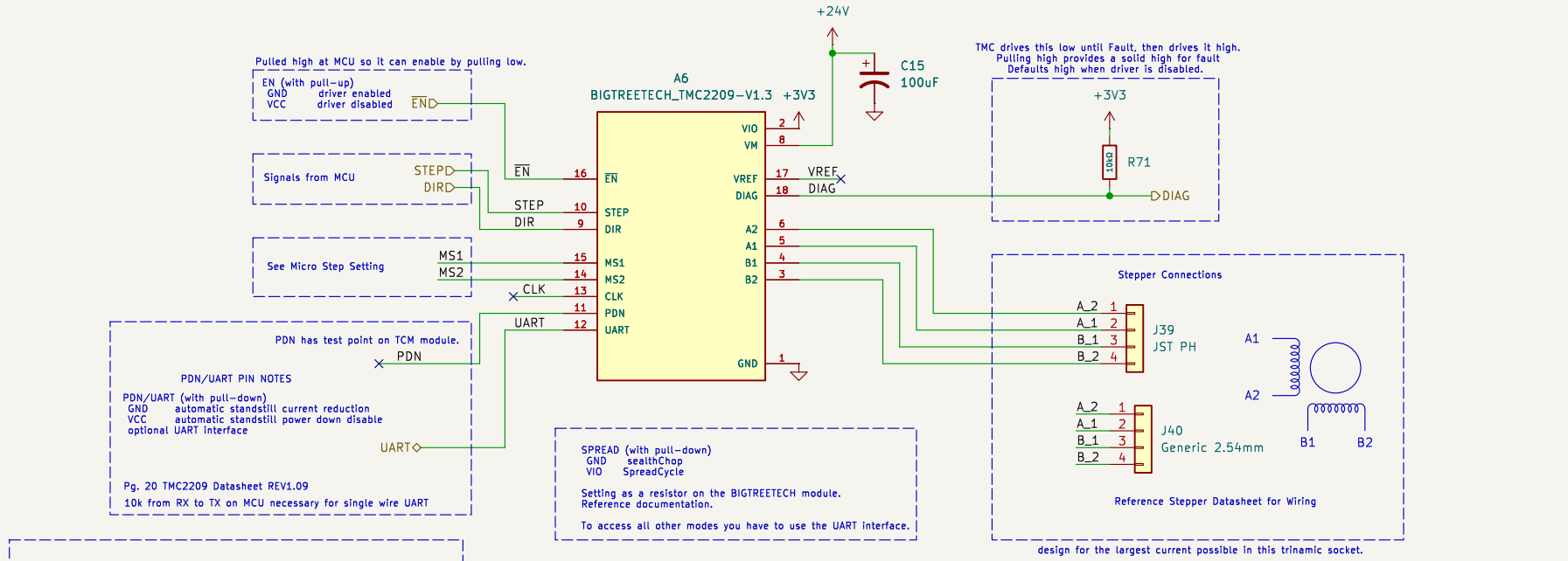

basically

Sheet: /Stepper Module4/
File: Stepper_Module.kicad_sch

Title: Distribution Board

Size: A4	Date: 2026-06-01	**Rev: 1.3**
KiCad E.D.A. 9.0.8		Id: 9/9